Service Parts

MONTANA-42, MONTANA-42H

42” Outdoor Woodburning Fireplace

Beginning Manufacturing Date: Sept 2003
Ending Manufacturing Date: Active

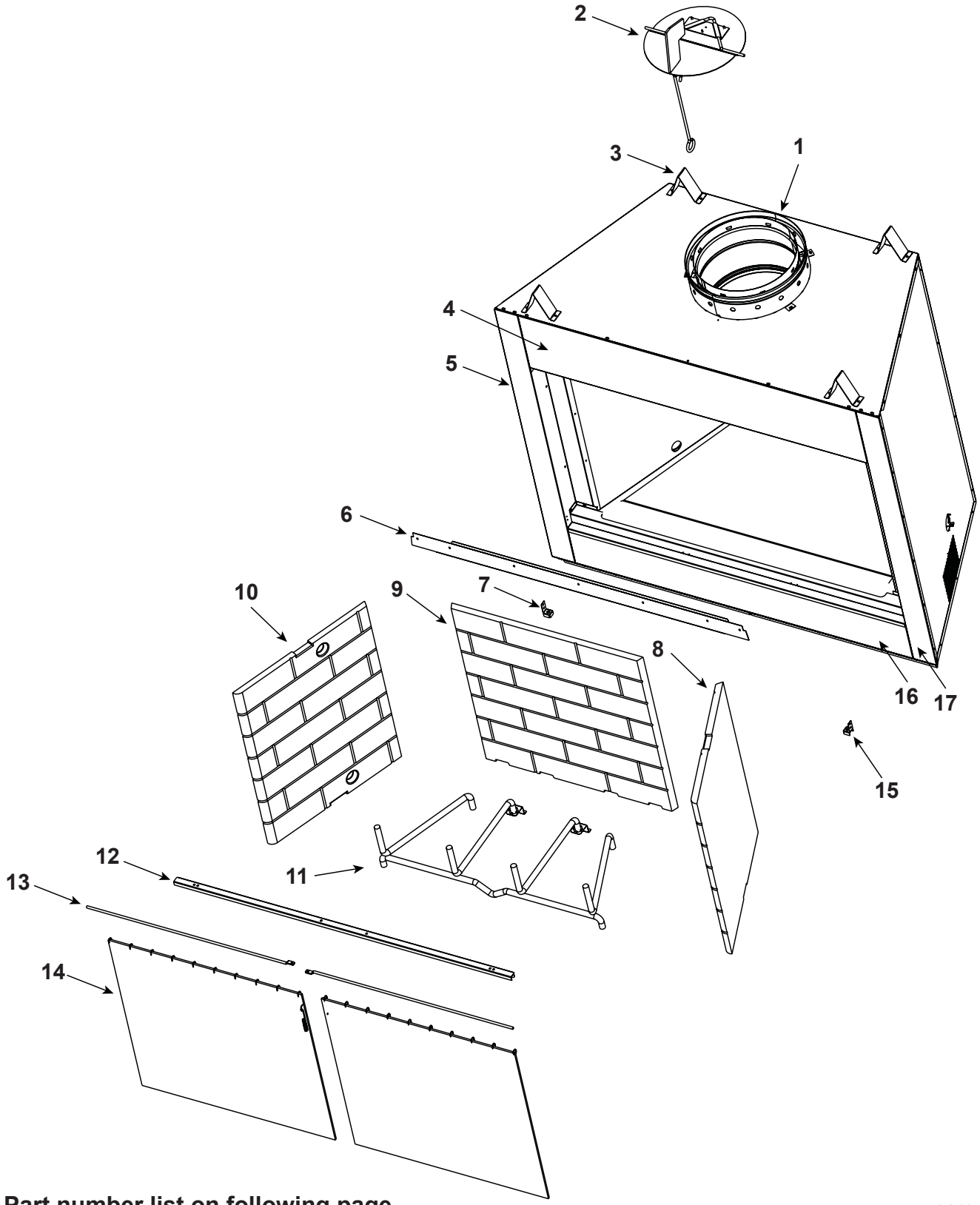

Part number list on following page.

02/17

outdoor lifestyles
by hearth & home technologies®

Service Parts

MONTANA-42, MONTANA-42H

Beginning Manufacturing Date: Sept 2003
Ending Manufacturing Date: Active

IMPORTANT: THIS IS DATED INFORMATION. Parts must be ordered from a dealer or distributor. **Hearth and Home Technologies does not sell directly to consumers.** Provide model number and serial number when requesting service parts from your dealer or distributor.

ITEM	DESCRIPTION	COMMENTS	PART NUMBER	Stocked in Depot
1	Starter Collar		30399	
2	Damper Assembly		34454	
3	Top Stand Off	Qty 4 Req	4044-111	
4	Upper Front Face		30395L	
5	Side Column Left		30375L	
6	Top Door Track		30400	
7	Door Clips	Qty 2 Req	30407	
	Tradtional Refractory			
8	**Right** Side Refractory		28393	
9	Back Refractory		28394	
10	**Left** Side Refractory		28393	
	Hearth Refractory		28391	
	Herringbone refractory available post week 3/04			
8	**Right** Side Refractory		4010-013	
9	Back Refractory		4010-015	
10	**Left** Side Refractory		4010-014	
	Hearth Refractory		4010-020	
11	Grate		GR21	
12	Hearth Pan	Pre AK560843	30405	
	Hearth Stone Retainer	Post AK560843	30403	
13	Firescreen Rod	Qry 2 Req	31375	**Y**
14	Screen Assembly	Qty 2 Req	30371	
15	Door Pivet Clip	Qty 2 Req	31527	
16	Bottom Front Face		30393L	
17	Side column Right		30376L	
	Gas Tube		30412	
	Smoke Shield		30402	
	Air Kit w/box		30416	
	Outside Air Hood	Qty 2 req	33271	
	Nailing Flange	Qty 4 Req	31190	